WESTGATE
THE FUTURE IS HERE...AND IT'S QUITE BRIGHT!

JOB NAME: _____

DATE: _____

TYPE: _____

DIMENSIONS:

4.9" W X 6.7" H X 4.8" L

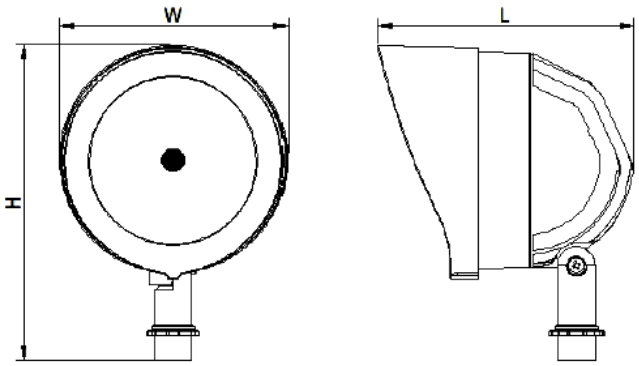

TC-GL-12V-15W-RGBW-BT-BR

WG SMART APP COMPATIBLE RGBW FLOOD LIGHT, 12V

MODEL	WATTS	VOLTAGE	LUMENS	COLOR TEMP
TC-GL-12V-15W-RGBW-BT-BR	15W	12V	405 LM	RGBW

ELECTRICAL SPECIFICATIONS:

- Voltage: 12V
- Wattage: 15W
- Power factor: >0.9
- Efficacy: 27LM/W

HOUSING SPECIFICATIONS:

- ACD12 aluminum with outdoor powder coating bronze finish
- Lifespan: 25,000 hr.
- Operating temperature: -40˚F to 104˚F

CERTIFICATIONS: UL

LISTED DAMP location DIMMABLE 3 YEAR WARRANTY

LIGHTING SPECIFICATIONS:

- Dimming: dimmable (Controlled by WG Smart App)
- Lens: Optical Lens: High light transmittance Glass
- Total lumens: 405LM
- Color temperature: RGBW (Controlled by WG Smart App)
- Beam Angle: 40˚

CONTROL BY APP

WG

Download on the App Store

GET IT ON Google Play

- Dimming controlled by Westgate Smart App
- RGBW controlled by Westgate Smart App

WARRANTY: 3 years

Rev. 2021-02-01